IMAO

SWING CLAMPS – STANDARD

with handle

without handle

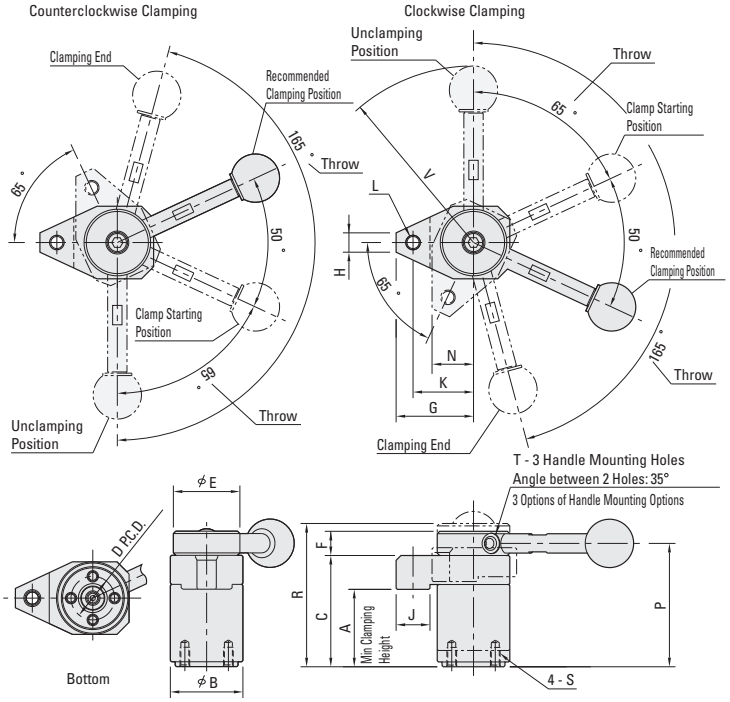

How To Use

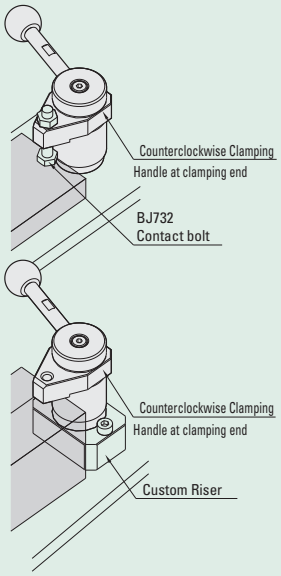

Tip Installation

When installing a tip on the clamp arm, lock the clamp arm using a wrench to prevent the clamp from receiving any torque.

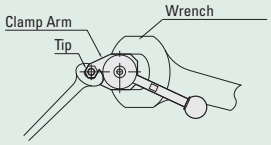

These swing clamps swing into position, then clamp straight down onto the work piece for direct downward pressure. When releasing the clamp, the clamp swings out 65 degrees for easy removal and placement of the work piece. Excellent for repetitive clamping operations. The tapped end of the clamp arm allows for custom clamping tip and greater clamping range. Can be ordered in either clockwise or counter clockwise clamping movement. Four screws and two locating holes allow for secure fastening and precision locating. Mounting bases are also available to provide top side mounting and height adjustment. The 150 series provides 170 lbs of clamping force, the 200 series provides 260 lbs of clamping force. Part numbers with R have clockwise clamping direction, part numbers with L have counter clockwise clamping direction. The body and shaft are made from SAE-4140 alloy steel. The clamp arm and adaptor head are made from SAE-1045 alloy steel. Parts are heat treated with black oxide finish. Handle is black plastic. See pages 20 and 21 for machinable clamp arm and other handle options.

With Handle Part #	w/o Handle Part #	A mm	B mm	C mm	P.C.D.* D mm	E mm	F mm	G mm	H mm	J mm	K mm	L mm	N mm	P mm	R mm	S mm	T mm	V mm	Clamping Range
QLSW150R	QLSW150NR	32	30	46	18	30	10	32	8	14	25	M6X1	17.0	51.0	57.5	M4X0.7	M5X0.8	73	1.5
QLSW150L	QLSW150NL	32	30	46	18	30	10	32	8	14	25	M6X1	17.0	51.0	57.5	M4X0.7	M5X0.8	73	1.5
QLSW200R	QLSW200NR	45	40	63	25	38	13	40	12	16	32	M8X1.25	22.5	69.5	78.1	M6X1	M6X1	107	2.1
QLSW200L	QLSW200NL	45	40	63	25	38	13	40	12	16	32	M8X1.25	22.5	69.5	78.1	M6X1	M6X1	107	2.1

*Pitch Circle Diameter

SWING CLAMP MOUNTING PLATES – STANDARD

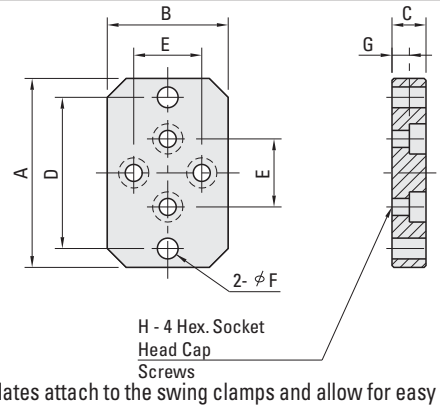

For use with the standard swing clamps shown above. These plates attach to the swing clamps and allow for easy fastening and top side mounting. Made from SAE-1045 alloy steel with black oxide finish.

Part #	A mm	B mm	C mm	D mm	E mm	F mm	G mm	H mm	Use With Clamp Series
QLSW150-P	50	32	9	40	18	5.5	4.5	M4	QLSW150
QLSW200-P	75	42	12	55	25	9.0	5.5	M6	QLSW200